Notebook Series -- Notebooks by Edison
Notebook, N-17-00-00.3

This undated notebook was possibly used during August 1917. All of the entries are by Edison and pertain to his work for the U.S. Navy during World War I. Included are notes on the way torpedoes work and how they sound, as well as Edison's reactions to newspaper reports of an oil tanker sunk by a German submarine. Additional entries consist of notes pertaining to poison gases, with references to the Watts dictionary of chemistry. The front cover is marked "No 2." The pages are unnumbered. Approximately 30 pages have been used.

Notes on Torpedo -

Pinion on Turbine, 18 teeth
Turbine makes 8000 Rev
min - meshes with 82
teeth -

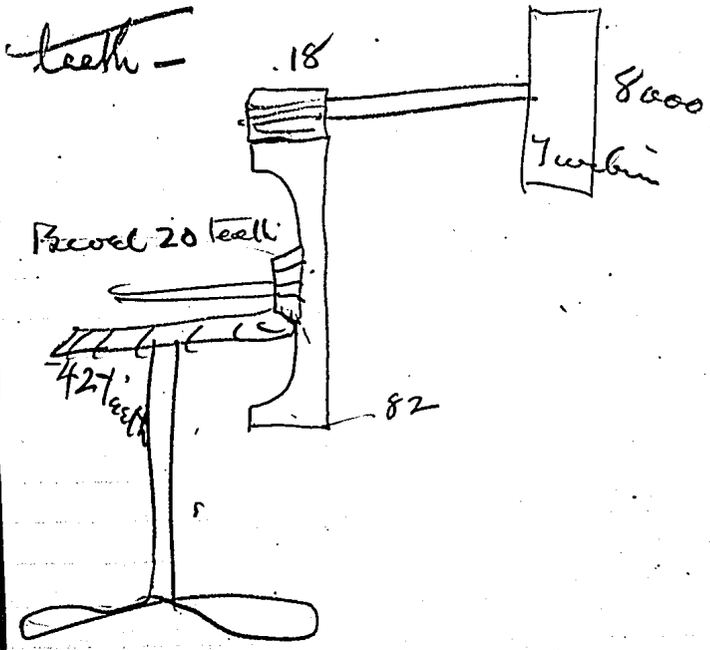

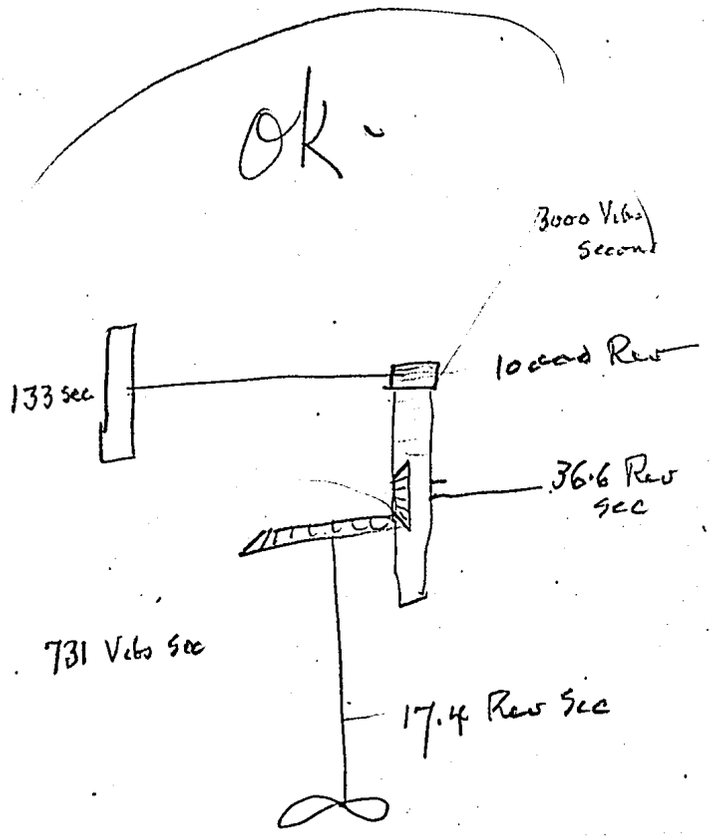

First pinion gives 2400 per second

Bevel gear gives 584

almost 4 to 1 –

First pinion 133 Rev sec

wheel 29.3

Screw 13.9

Levitt says the turbine runs –

10000 Revolutions min –

This will alter the above

3000, sec

731. sec – 4 to 1, nearly

Hohoned Gear, 75 per Second

Gyroscope Runs about 13000
Makes no sound after its
started, but compressed
air impinging on the
teeth of a 1½" dia spur
gear wheel 3/8 face
teeth about 1/16 thick
gives a high whistling
note, etc

Sunken in 10 and 7 June
Thursday 23rd fight between
Sub and a Oil
Tanker. Sub gave 175
shots - Tanker 300

7500 yard & less range —
Sub fired a torpedo it
missed, boat captured
German Capt. said he
set his torpedo at 15 ft
the tanker draws 15
he said it ~~[illegible]~~
he missed —

Tanker Zig Zaged although
Submarine was
chasing far astern,
had 2 3" guns 13 guns
German had 4" guns
forward for action

if so why Zig Zag
Most of the battle was
at 7500 yards - started
at ~~[illegible]~~ 9000 -
Only once did Sullivan hit
tanker & that was
Superstructure —

& Sub only got one in
Coming home

3000 sec would resonant Column

2.15" Long

or for 731 sec -

8.9" Long

#1 Trichloro-acetamide, unstable, dont keep
Violently attacks Eyes + mucous membranes.
Watts 3rd sup p 2 under acetamide.

See what liquid dissolves the most
Acrolein —

Aluminum powder mixed with TNT
ditto Mg — ditto Zinc dust,

Put small Can Opium in charge all -
5% of the bulk —

Can of pyrogallate Nauffer quicker
Vapor blackens in air

Sb Oxychloride readily sol in
Alcohol — to clear liquid
decomposed by water —

in Paris 6 to 8 mlg of scaled
metals as dust per Cubic
Meter 1½ @ 3½ Mill dust on Sheet

1 meter square on calm night 45 ft above the Earth in Paris — 25% organic

Azoxybenzine dangerous Explodes on heating — Watts 3rd, sup p 215

Metadiazobenzine sulphonic Explodes — Dangerous to dry when perfectly dry explodes with great violence by stirring with a spatula. Crystallizes from water when not so Explosive — can be Exploded by striking with a hammer | Watts 3rd Sup. p 229

Also Ortho-diazobenzenesulphonic acid dangerous detonate although when heated on platinum foil.

Sup p 230

Decomposes giving volute fumes

Amide of Nitrotetrabromobenzene sulfonic acid — Watts 3rd p 249 -

Dichlorobenzoic acid.
y acid Volatilizes with Vapors of water, sublimes very beautifully Even at lower temp Watts 3rd 263

Dinitrazobenzoic acid detonates also its Salts detonate Watts 3rd 274 275 — Metadiazobenzoic Sulphate detonates.

Parabromobenzyl Bromide.
+ other attack mucous membrane 3rd Watts 314

Tear exciting Boric Triallyate
Watts 3 346
its an ether, burns with green flame

Boric diethylhydrate, liquid,
Spontaneously inflammable
Watts 3 348

Monobromocamphor
sublimes easily

White Carbon disulphide —
When Nitrogen Monoxide
passed over permanganate
moistened with CS_2 a gaseous
mixture is produced it burns
a flame very rich in Chemical
rays of Actinic on a Bunsen
burner condensed so no
explosion it produces a
flame superior to Magnesium
Watts 3 407

Cerium metal burns with greater
brilliancy than even Magnesium
goes off easier than Mg
set off by friction —
brilliant sparks by striking metal
with flint —

Salts decomp by water
Mercuric Sulphate, (turpeth)
Bi Nitrate normal.
Antimonous Chloride
Bi trichloride
Potassio-Calcic sulphate

Chrysene sublimes 250 C
Dibromochrysene 273 Watts
3rd 464

Tetranitrochrysene - Melts 300 C
+ detonates at strong or heat
sparingly or nearly insol in all solvents

Acetylene in Acetone
large flame with insufficient
oxygen be used for
making black smoke

Tetranitronaphthalmethane
melt. 260 @ 270 + detonates
slightly at higher temp —
Watts 3-653 sol — aniline

Ethoxythionyl Chloride
slightly fumes — (liquid)
Watts 3rd 743

Read 3rd Rep Watts
pt 1 —

α-Dinitropropane Ag Salt
Explosive — Watts 3rd 1492

Diazophenol Nitrate Very Explosive
but burns without detonation leaving
lots charcoal —
Watts 3rd 1524

Arsenious dichlorophenide
Liquid Exerts a Violent Corrosive
action on the skin
fumes in the air —
Bools 255 not affected by
water. (1 volume) —
Watts 3rd 1552

Arsenic Oxychlorophenide
Crystalline — MP 100 fumes in
the air H_2O Converts it to
phenylarsenic acid —

Phosphenyl Tetrabromide —
solid — fumes strongly in
the air

Nitrophosphenylic acid
MP 132 explodes at 200 C
Watts 3 - 1579

Phenylphosphine, liquid
inflames in Contact with
free O - unless cooled
Watts 3 1580

Look up the phosphine

Phosphorus Pentafluoride
liquid attacks mercury, forms
under - combustion with H_2O

Propyl Chloro-carbonate
strongly attacks the eyes
Watts 3 1676

Trimethyl sulphine Chloride
the Chromate & Iodate
Melt 140 & then explode
Watts 3rd 1849

Normal Ammonium Sulphite - heated
gives off volatile vapors
It seems that its formed by
heating sulphites & Considerable
Thiocyanate, ~~by~~ ~~NH4~~ Combustion
takes place & Sulphite Volatilizes
wants testing
Watts 3rd 1868

Tetrabromo-acetic Ether
Only fumes strongly in the air
decomposed by water
3rd

Tetra-brom-ethyl oxide
fumes in air decomp by H_2O
3rd 1908

Tetranitro-Anthraflavone
Explores - Watts 3rd 1914

Titanium dichloride -
Thrown on water it hisses
like red hot iron & if
touched by a drop of water
Catches fire

Trinitrophenylsulphonic acid
its Salts Explode violently
when heated

~~Acetone absorbs HCl in large quantities
perhaps 100 vols 64 absorbed ~~ [illegible]
Lowen of [illegible]~~

~~Strong~~ By dropping acetone
into fuming Nitric acid contained in
a flask Externally Cooled & adding
water as soon as nitrous vapours
heavy oil produced, which on heating
Explodes with Violence giving off Red fumes

Monochloroacetone liquid
BP 117 acts strongly on eyes
Copious flow of tears.

Dichloroacetone attacks nose
& Eyes with violence, liquid & Vapors
Skin wound difficult to heal
Insol H_2O, Sol Alc & Ether liquid
BP 116 C — Watts Vol 1 30 —

Chloride Acetyl Liquid B 55
fumes slightly in air
Vapor attacks Eyes & respiratory organs
strongly - Decomposed by water
with great Violence

Peroxide Acetyl thick liquid
Explodes with great Violence
when drop heated on watch
glass - Powerful Oxdg agent.
Watts 1st under Acetyl

Acrolein – Liquid BP 52.4 C
its Vapor is so intensely irritating
that a few drops in a room make
atmosphere insupportable —
~~Dis~~ 2½% dis in H_2O – Readily
in Ether, must be fresh & kept
from air as it oxidizes
(Unstable) NG

Chloride Aluminum. MP 180 c
fusible in large vessel
fumes in the air — Wells / Vol
Tender Aluminum – good

Nitroanisic Acid Explodes
when heated suddenly –
MP 180, sparingly sol in
H_2O Wells Vol 1 302

White Paint. Sb Oxychl Cryst

Antimony – Watts Vol 1

Stibtriamyl
liquid – not spontaneously inflammable
Very viscid below 20 c
SG 1.333 at 17 It fumes
strongly & decomposes to a
white powder
Drop on paper expanded to an
charred paper by heat of oxidation
Insol in H_2O (Expensive)

Stibtriethyl
~~dis~~ SG 1.32 liquid BP 158 c.
insol H_2O dis alcohol Ether readily
Drop spread on glass and
Emits thick white fumes
& finally takes fire & burns
with white strongly luminous
flame (Not for Experiment)

Nitrate of Hibmethylium
Cryst - Sol H_2O slowly in Alc & when heated gives off White fumes which immediately take fire & then explode with large white flame just like a mixture of Nitre & Charcoal Very stable salt, not decomp by strong boiling Sulfuric acid

Arsenic Chloride Butter of Arsenic - fumes in air BP 132 Evap in air at ord temp. Very ~~po~~ & highly poisonous - cheap

Arsenic fluoride -
BP 63. fumes slowly at ord temp - 4 times as heavy as air - drop of liquid on skin produces painful wounds long while to heal cheap

Arsenetted Hydrogen Liquifies 30 C dont Combine with chlorine or bromine Exceedingly poisonous a greater care must be used in handling this gas, (Cheap)

Arsenmethyl Dichloride
Liquid - BP 133 dont fume not decomp by H_2O due in the Vapor of this Compound Exert a most Violent action on the mucus membranes on smelling it the Eyes nose & whole face swell up & peculiar lacrimating pain is felt extending down to the throat, (Cheap)

Cacodyl - fumes in air & spontaneously inflammable Very dangerous to handle both from fire & poison
Chloride Cacodyl - dont fume but vapors irritate lacrimating liquid Calculated pts BP 100 (liquid)

Lacrymator a pungent suffocating odor, when inhaled in rather large quantities makes Eyes smart + bleeding + membranes mucous swell.
insol H_2O Sol in alcohol ale proportions —

Cyanide of Cacodyl is the very limit of poison —
Crystalline MP 33 C —
Boils 140 C Vapor S.G. 4.63
most poisonous of all the Cacodylic Compounds
few grains defined as vapor from air of a room
Excites giddiness, delirium numbness of hands & feet + even loss of Consciousness — These attacks are however of short duration providing the person escapes in time + Cheap —

Arsenide of Ethyl fumes Copiously in the air dont fume spontaneously (unstable)

Nitrobenzoic acid MP 127
sublimes 140 C no residue
Vapors Excite Coughing
dis in 400 pts H_2O

Chloride Benzoyl —
BP 196 Vap Den 4.97
makes Eyes water — decomp by H_2O giving HCl + Benzoic acid Sol in all proportions in CS_2 insol water
(for smoke with NH_4)

Boron Chloride Liquid boils
17 C fumes in damp air
V Density 4.06 - yields HCl &
Boric acid -

Fluoboric acid Check
liquid only fumes in
the air boils above
100 C distills without
alteration, highly Caustic
Chars organic Matter

Acid Borate of Ethyl
(Liquid) gives off white
fumes in air at 200 C

Butryal —
Monochlorinated Butryal
Liquid - BP 141 C
insol H_2O pungent tear
Exciter. dis Cl -

Sulphochloride Carbon
Very irritating to the Eyes

Chloral — oil,
SG 1.5 Vapor Den 5.13
Excites copious flow tears
acts on skin which peel
off next day
no acid reaction
Combines with H_2O for
Chloral Hydrate

Chloraldehyde
Liquid - gives off Excessively pungent Vapors

Chlorides of acid radicals
mostly fuming liquids -

Perchloric acid (liquid)
fumes, very volatile
SG 1.782 fumes denser
white, due to decomp by
H_2O - most powerful oxygen
known sets organic on
fire instantly amounting
to actual Explosion nearly
Equal to Chloride of
Nitrogen - 1 1
Very dangerous blisters Skin
takes months heal
unstable also
Containers sometimes
Explode

Chloroperchloric acid ? (liquid)
forms extremely dense fumes
in contact with air Watts
C - 921 -

Chloride Cyanogen (liquid)
attacks Eyes + nose violently

Chloropicrin -
Liquid SG - 1.66
BP 120 c - attacks Eyes &
nose violently -

Oil mustard about same effect

Acetylene Combines with
Copper + also Silver to
make detonating Compounds

Bromoacetylene gas
Spontaneously inflammable
Liquefies at 45 lbs pressure

For tracer in 3" & larger shells bore holes in base of projectile with solid very slow burning fuse leading to small chamber of black powder making big smoke which goes off suddenly at 2 or 3 places along trajectory —